Elastic Stiffness and Yield Strength of Periodic Closed-Cell Honeycombs

Małgorzata Janus-Michalska

Chair of the Strength Materials
Institute of Structural Mechanics
Cracow University of Technology

1. Introduction
2. Physical motivation
3. Two-scale modeling
4. Framework of microstructural analysis

- representative unit cell
- kinematics in uniform strain states
- mechanical model of cellular structure with closed cells
- equivalent continuum – stress definition
- stiffness tensor- effective elastic constants

5. Graphical representation of Young’s moduli
6. Yield stress
7. Conclusions
8. References

natural cellular materials (cork,wood)

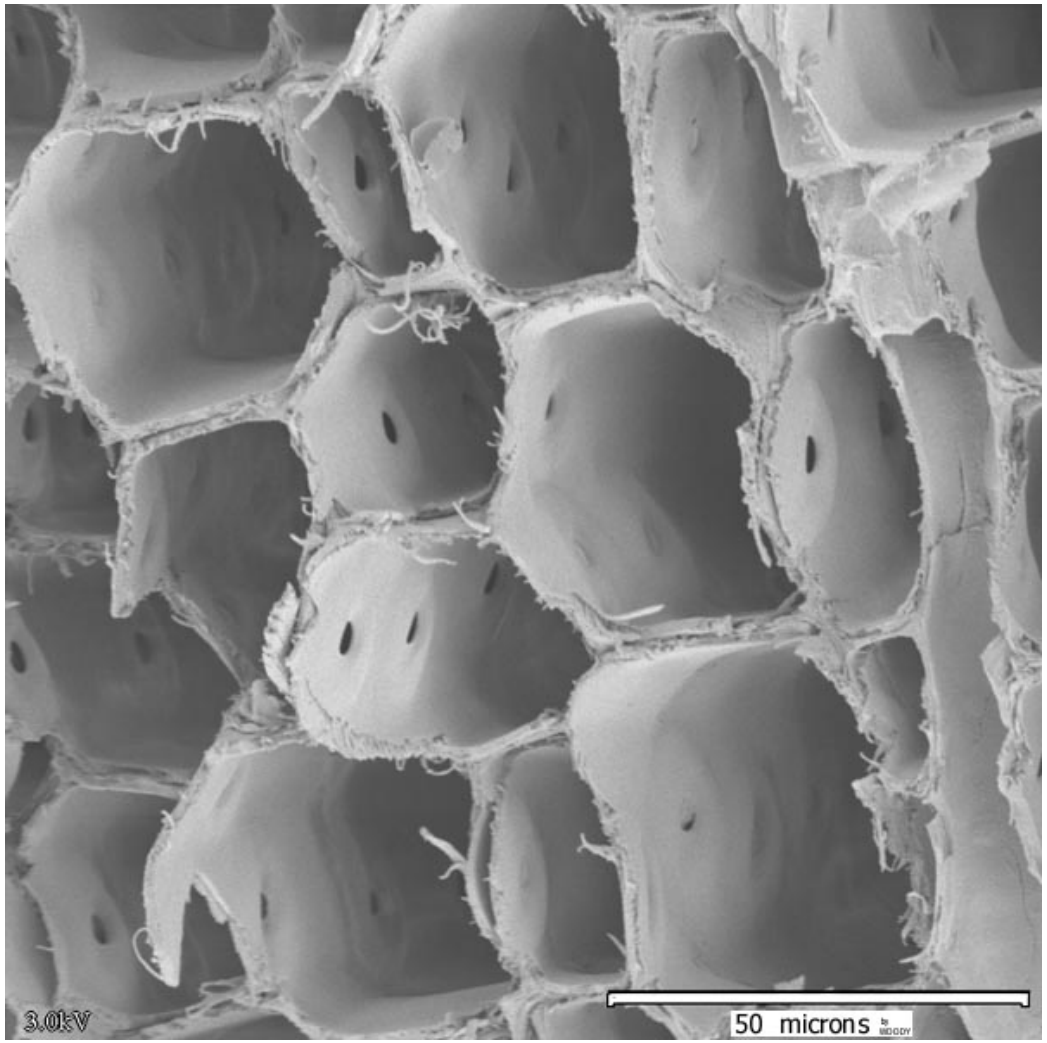

manufactured honeycombs (metal, paperboard)

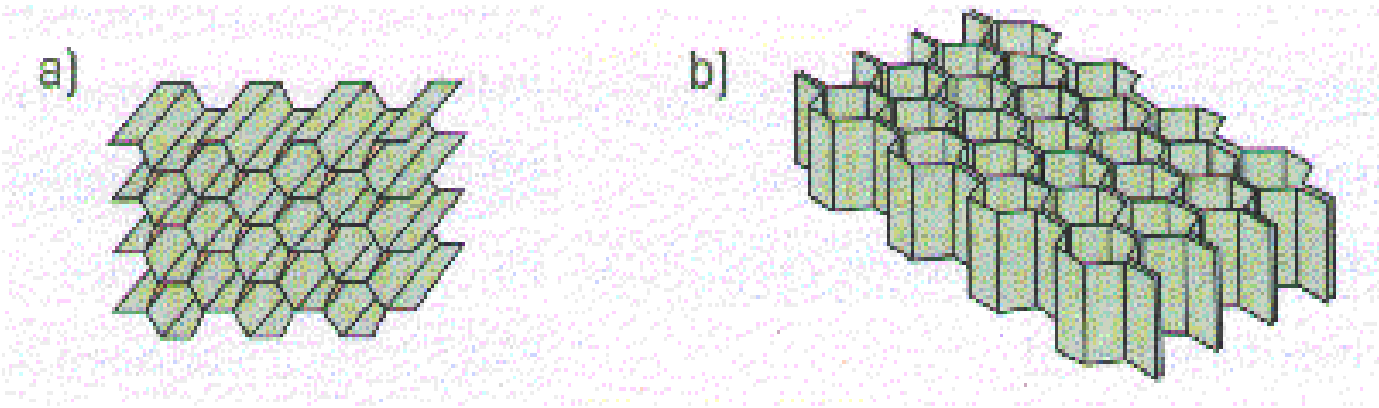

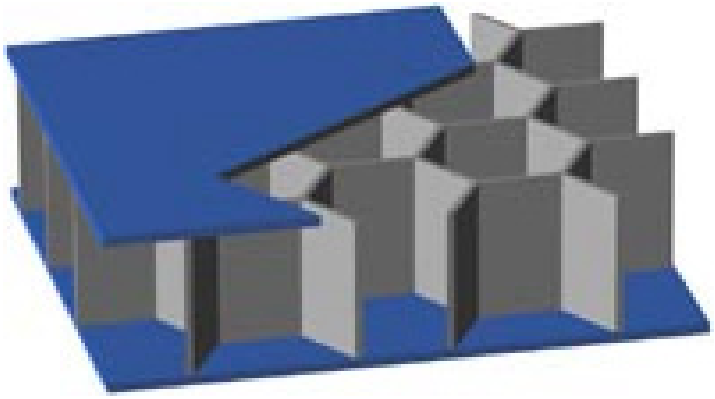

„Honeycomb” cellular structure

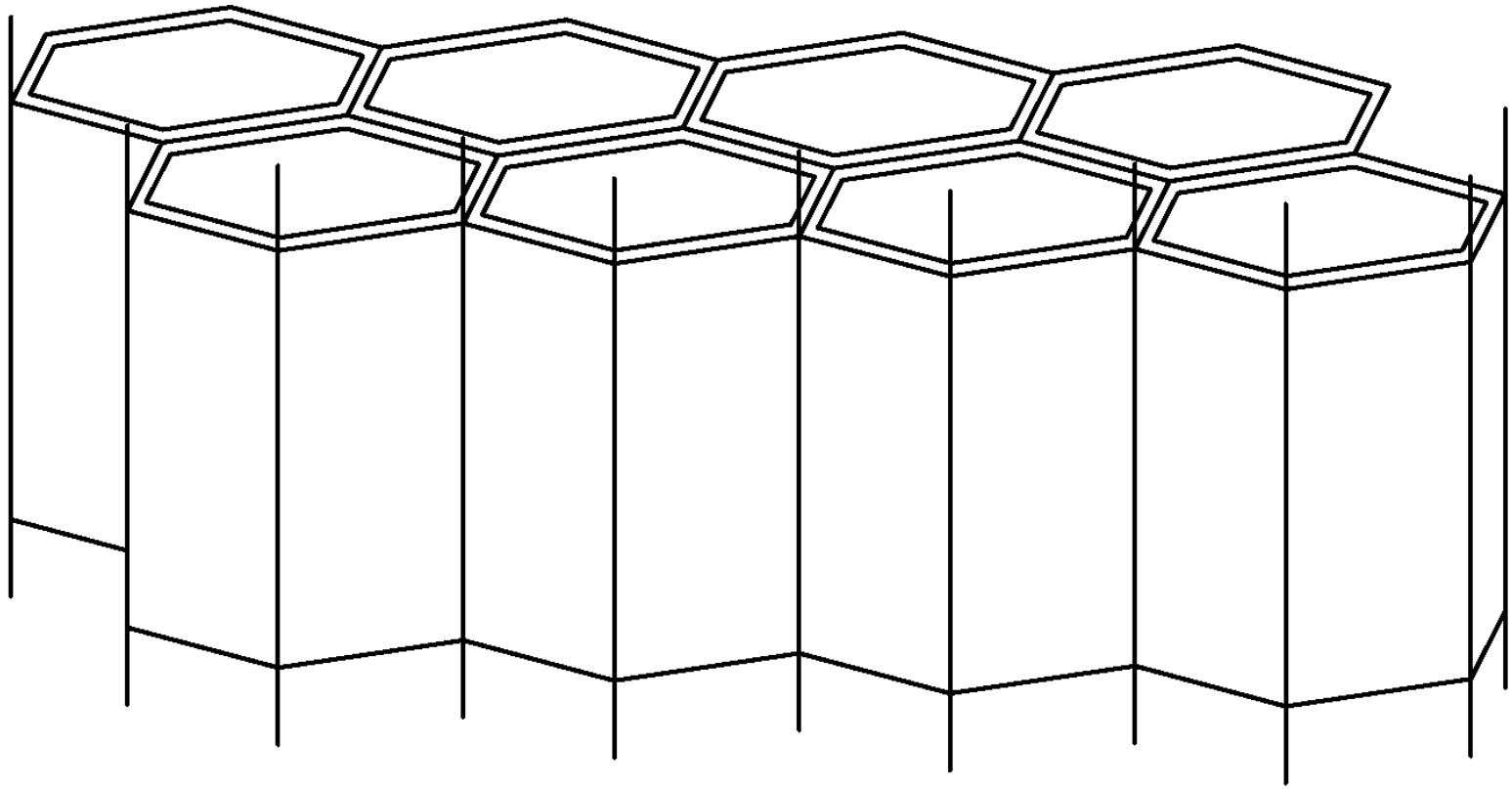

Representative unit cell

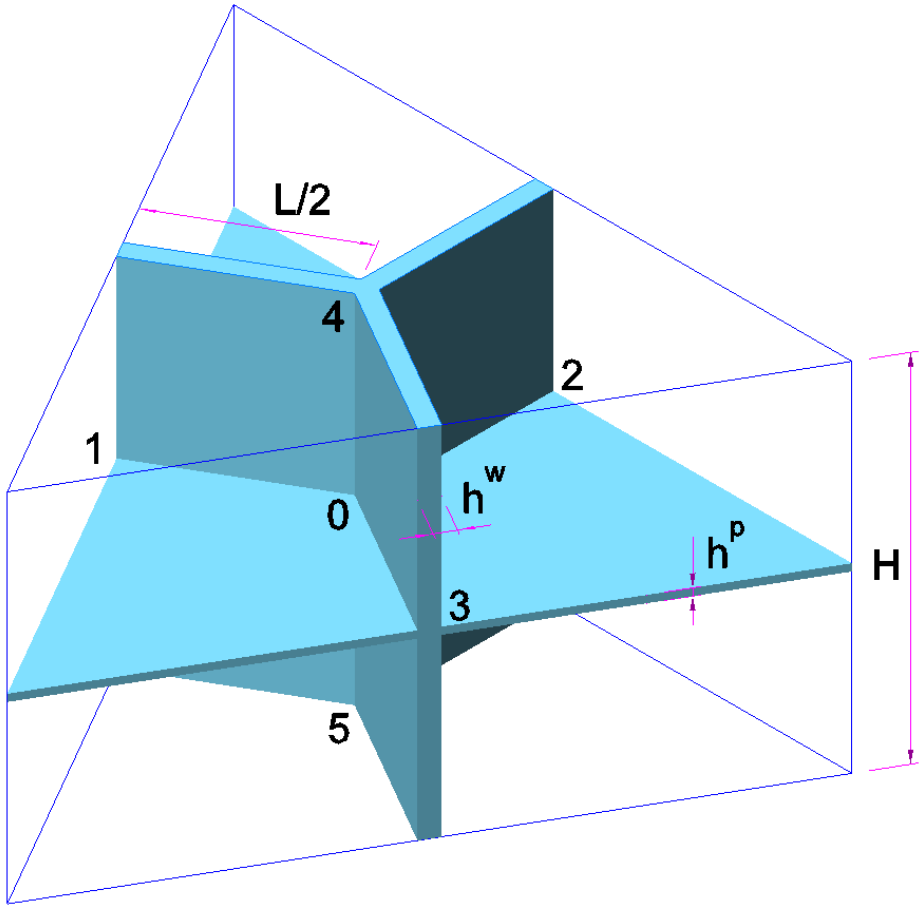

triangle prism, symmetry: transversal isotropy

Geometry:

$\mathbf{b}_i^0$ midpoints position vectors

$\mathbf{e}_i^0$ midpoints position versors $\quad i = 1, \ldots. n$

$\mathrm{h}^{\mathrm{w}}, \mathrm{h}^{\mathrm{p}}, \mathrm{L}, \mathrm{H}$ - geometric structural parameters

Uniform strain states of equivalent continuum

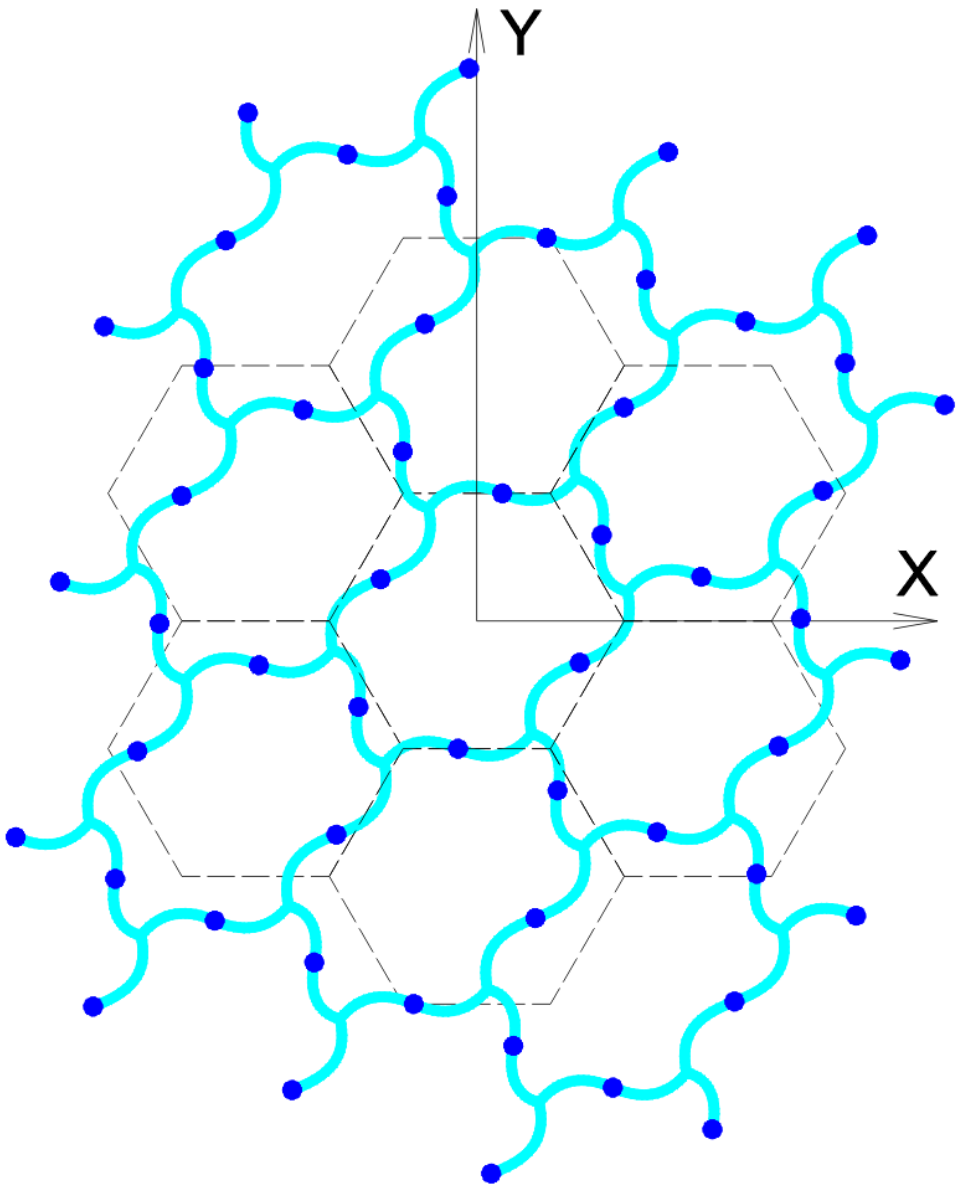

displacement affinity of nodes and midpoints

Kinematics

$$\mathbf{\Delta}_i = \mathbf{\Delta}_{i-0} + \boldsymbol{\psi} \times \mathbf{b}_i^0 + \mathbf{\Delta}_0$$

$\mathbf{\Delta}_i$ - midpoint displacements

$\mathbf{\Delta}_{i-0}$ - relative displacements in relation to central node

$\mathbf{\Delta}_0, \boldsymbol{\psi}$ - nodal rigid motion parameters

Method of structural mechanics

(displacement method)

plate model

bending

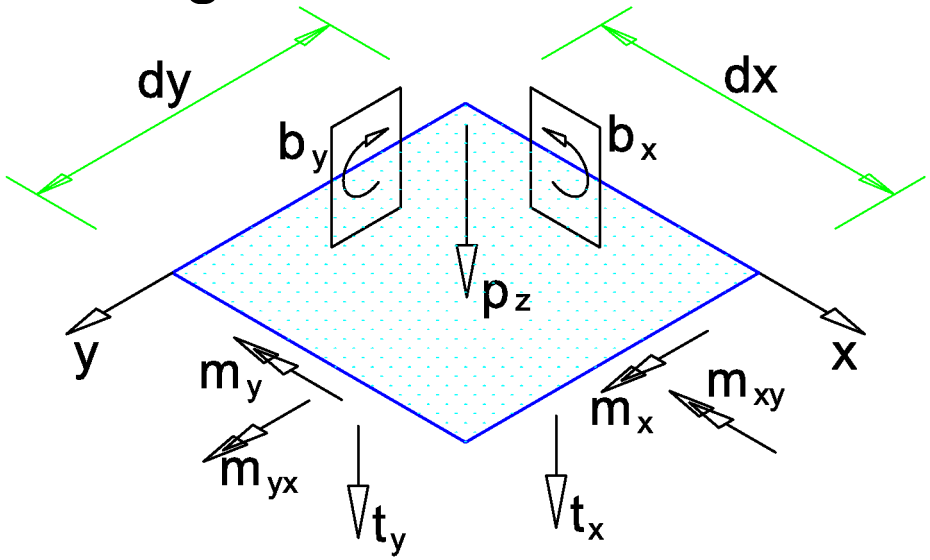

geom. eq. $\kappa_x = -\frac{\partial^2 w}{\partial x^2}$ $\kappa_x = -\frac{\partial^2 w}{\partial x^2}$ $\kappa_{xy} = -2\frac{\partial^2 w}{\partial x \partial y}$

phys.eq. $m_x = \mathrm{D_m}\left(\kappa_x + \nu_\mathrm{s}\kappa_y\right)$, $m_y = \mathrm{D_m}\left(\kappa_y + \nu_\mathrm{s}\kappa_x\right)$, $m_{xy} = \mathrm{D_m}\frac{\left(1-\nu_s\right)}{2}\kappa_{xy}$

equil. eq. $\frac{\partial t_x}{\partial x} + \frac{\partial t_y}{\partial y} + p_z = 0$ $\frac{\partial m_x}{\partial x} + \frac{\partial m_{xy}}{\partial y} - t_x + b_x = 0$

$\frac{\partial m_{xy}}{\partial x} + \frac{\partial m_y}{\partial y} - t_y + b_y = 0$ +boundary conditions

bending plate stiffness: $\mathrm{D_m} = \frac{\mathrm{E_s h^3}}{12\left(1-\nu_\mathrm{s}^2\right)}$

displacement equation:

$\mathrm{D_m}\nabla^2\nabla^2 w = p_z$ +boundary conditions

membrane

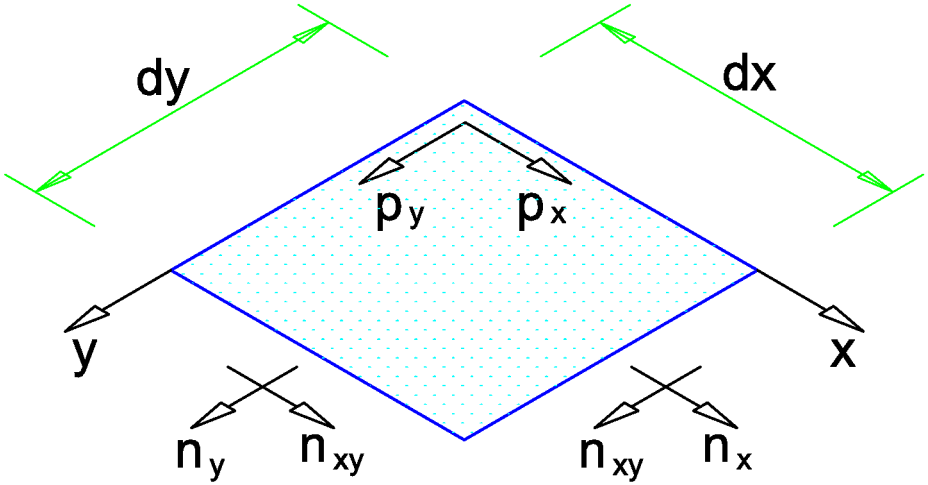

geom. eq. $\varepsilon_x = \dfrac{\partial u}{\partial x} \qquad \varepsilon_y = \dfrac{\partial v}{\partial y} \qquad \gamma_{xy} = \dfrac{\partial u}{\partial y} + \dfrac{\partial v}{\partial x}$

phys.eq. $n_x = \mathrm{D_n}\left(\varepsilon_x + \nu_s \varepsilon_y\right), \quad n_y = \mathrm{D_n}\left(\varepsilon_y + \nu_s \varepsilon_x\right), \quad n_{xy} = \mathrm{D_n}\dfrac{\left(1-\nu_s\right)}{2}\gamma_{xy}$

equil. eq. $\dfrac{\partial n_x}{\partial x} + \dfrac{\partial n_{xy}}{\partial y} + p_x = 0 \quad \dfrac{\partial n_{xy}}{\partial x} + \dfrac{\partial n_y}{\partial y} + p_y = 0$ +boundary conditions

membrane stiffness: $D_n = \frac{E_s h}{1-\nu_s^2}$

displacement equation:

$$D_n\left(\frac{\partial^2 u}{\partial x^2}+\nu_s\frac{\partial^2 u}{\partial x\partial y}\right)+D_n\left(\frac{1-\nu_s}{2}\right)\frac{\partial}{\partial y}\left(\frac{\partial u}{\partial y}+\frac{\partial v}{\partial x}\right)+p_x=0$$

$$D_n\left(\frac{1-\nu_s}{2}\right)\frac{\partial}{\partial x}\left(\frac{\partial u}{\partial y}+\frac{\partial v}{\partial x}\right)+D_n\left(\frac{\partial^2 u}{\partial y^2}+\nu_s\frac{\partial^2 u}{\partial x\partial y}\right)+p_y=0$$ +boundary conditions

E_S, ν_S - skeleton material constants

The aim: force-displacement relations

wall (w) membrane (p)

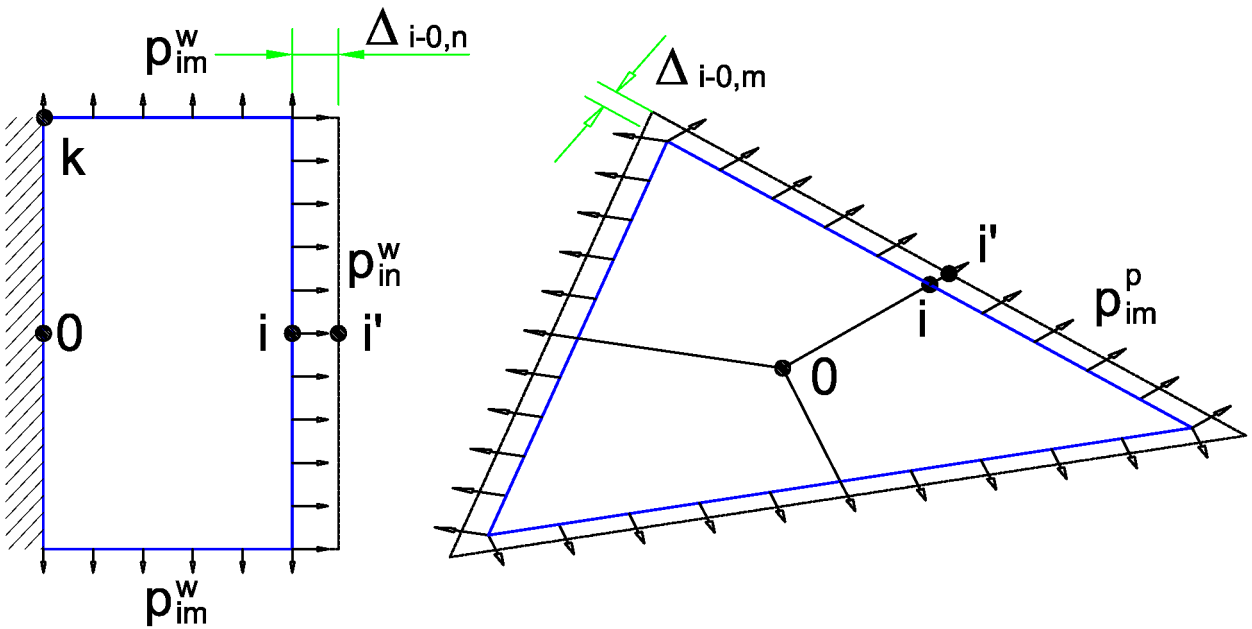

Microstructural stiffnesses for displacements in the ni direction i=1,2,3:

$$s_{nnL} = \frac{2E_s}{1-\nu_s^2}\left(\frac{H}{L}h_w + \sqrt{3}h_p\right), \qquad s_{nmL} = \frac{2E_s\nu_s}{1-\nu_s^2}h_w,$$

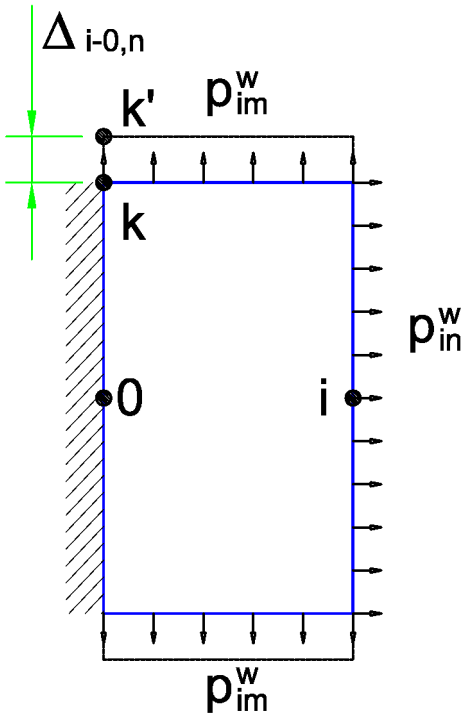

Microstructural stiffnesses for displacements in the ni direction i=4,5:

$$s_{nmH} = \frac{3E_s\nu_s}{1-\nu_s^2}h_w \quad , \qquad s_{nnH} = \frac{3E_s}{1-\nu_s^2}\left(\frac{h_w L}{H}\right)$$

wall (w) membrane (p)

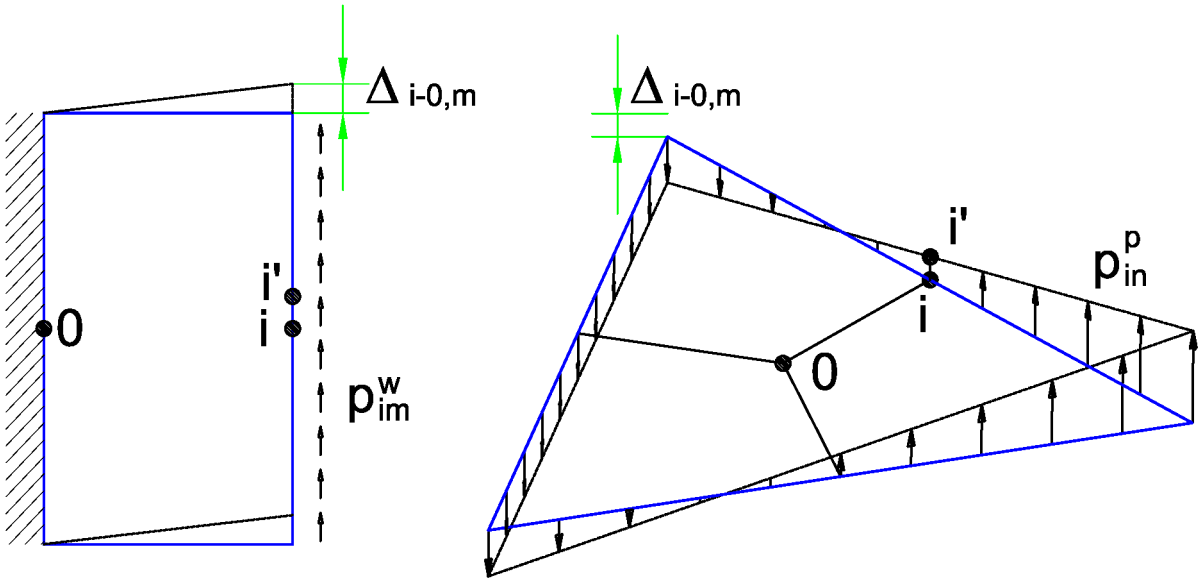

Microstructural stiffnesses for displacements in the m direction :

$$s_{mmH} = \frac{E_s h_w}{1+\nu_s}$$

wall (w) membrane (p)

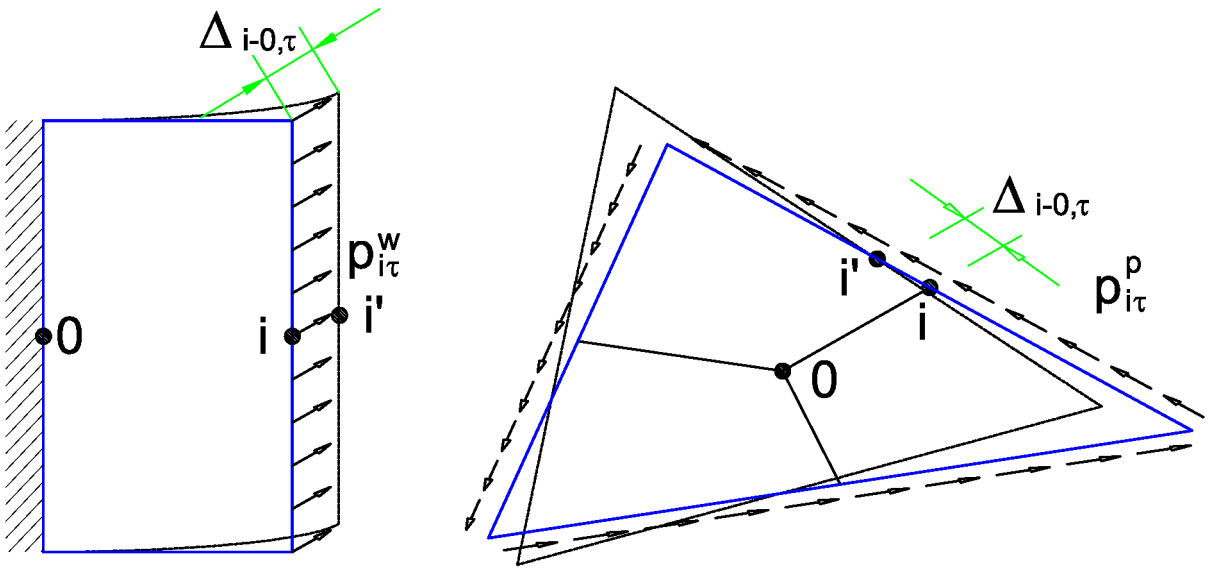

Microstructural stiffnesses for displacements in the tau direction :

$$s_{\tau\tau L} = 2E_s\left(\frac{H}{L^3}h_w^3 + \sqrt{3}h_p\right)$$

Force-displacement relations

$$F_{in} = \mathrm{s}_{\mathrm{nnL}}\,\Delta_{0-i,n} + \sum_{j=4}^{5} \mathrm{s}_{\mathrm{nmL}}\,\Delta_{0-j,m} \quad , \qquad F_{i\tau} = \mathrm{s}_{\mathrm{i\tau\tau L}}\,\Delta_{0-i,\tau} \, ,$$

$$F_{im} = \mathrm{s}_{\mathrm{mmL}}\,\Delta_{0-i,m} + \sum_{j=4}^{5} \mathrm{s}_{\mathrm{nmH}}\,\Delta_{0-j,n} \quad , \qquad i = 1, 2, 3.$$

$$F_{kn} = \mathrm{s}_{\mathrm{nnH}}\,\Delta_{0-k,n} + \sum_{j=1}^{3} \mathrm{s}_{\mathrm{nnL}}\,\Delta_{0-j,n} \quad , \qquad F_{k\tau} = \mathrm{s}_{\mathrm{k\tau\tau H}}\,\Delta_{0-k,\tau} \, ,$$

$$F_{km} = \mathrm{s}_{\mathrm{mmH}}\,\Delta_{0-k,m} + \sum_{j=1}^{3} \mathrm{s}_{\mathrm{nmL}}\,\Delta_{0-j,n} \, , \qquad k = 4, 5.$$

Equilibrium conditions:

$$\sum_{i=1}^{n} \mathbf{F}_i = 0 \qquad \sum_{i=1}^{n} \mathbf{F}_i \times \mathbf{b}_i^0 = 0$$

a) **uniaxial extension** ε_α in the direction α, $\alpha = x, y, z$.

$$\mathbf{\Delta}_i(\varepsilon_\alpha) = \varepsilon_\alpha \left(\mathbf{b}_i^0 \cdot \mathbf{e}_\alpha\right)\mathbf{e}_\alpha \qquad i = 1, \ldots. n.$$

b) **pure shear** $\gamma_{\alpha\beta}$ in the plane $\alpha\beta$, $\alpha \neq \beta$.

$$\mathbf{\Delta}_i(\gamma_{\alpha\beta}/2) = (\gamma_{\alpha\beta}/2)\left(\left(\mathbf{b}_i^0 \cdot \mathbf{e}_\alpha\right)\mathbf{e}_\beta + \left(\mathbf{b}_i^0 \cdot \mathbf{e}_\beta\right)\mathbf{e}_\alpha\right) \qquad i = 1, \ldots. n.$$

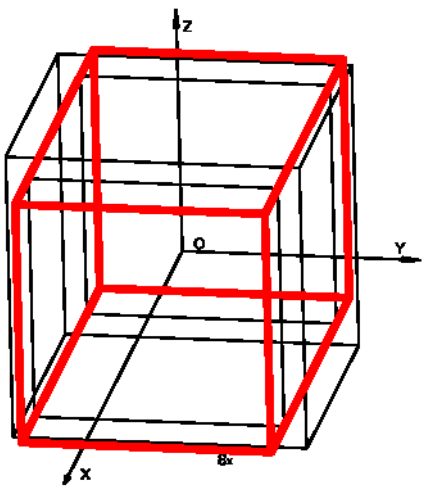

a)

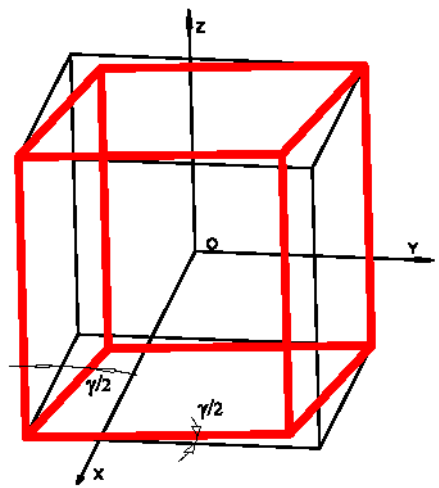

b)

Hooke's law for anisotropic solid

$$\boldsymbol{\sigma} = \mathbf{S} \circ \boldsymbol{\varepsilon}$$

$\mathbf{S}$, stiffness tensor , $\mathbf{C} = \mathbf{S}^{-1}$ compliance tensor

Stress tensor definition for equivalent continuum

$$\boldsymbol{\sigma} = \frac{1}{V} \int_{V^s} \boldsymbol{\sigma}^s dV$$

$$\boldsymbol{\sigma} = \left\langle \boldsymbol{\sigma}^s \right\rangle_V = \frac{1}{V} \sum_{A_i} \left(\mathbf{t}_i \otimes \mathbf{e}_i \right) dS \ , \quad t_i = F_i / A_i$$

Table 1. Elements of stiffness matrix

s_{1111}	$S_{1111}=\frac{\sqrt{3}}{12H}\left(\frac{s_{nnL}+3s_{\tau\tau L}}{s_{nnL}+s_{\tau\tau L}}\right)s_{nnL}$,
s_{1122}	$S_{1122}=\frac{\sqrt{3}}{12H}\left(\frac{s_{nnL}-s_{\tau\tau L}}{s_{nnL}+s_{\tau\tau L}}\right)s_{nnL}$,
s_{1133}	$S_{1133}=\frac{\sqrt{3}}{3L}s_{nmL}$,
s_{3333}	$S_{3333}=\frac{2\sqrt{3}}{9L^2}Hs_{nnH}$,
s_{2323}	$S_{2323}=\frac{2\sqrt{3}}{3}\left(\frac{s_{nmH}}{3Ls_{nmL}+4Hs_{nmH}}\right)s_{nmL}$.

$$S_{ijkl}=S_{ijkl}\left(H,L,h_w,h_p,E_s,\nu_s.....\right)$$

Stiffness tensor for transversal isotropy:

$$\mathbf{s} = \begin{bmatrix} s_{1111} & s_{1122} & s_{1133} & 0 & 0 & 0 \\ s_{1122} & s_{1111} & s_{1133} & 0 & 0 & 0 \\ s_{1133} & s_{1133} & s_{3333} & 0 & 0 & 0 \\ 0 & 0 & 0 & 2s_{2323} & 0 & 0 \\ 0 & 0 & 0 & 0 & 2s_{2323} & 0 \\ 0 & 0 & 0 & 0 & 0 & s_{1111} - s_{1122} \end{bmatrix}$$

Young's moduli

$$\frac{1}{E(\xi)} = \left(\mathbf{e}_\xi \otimes \mathbf{e}_\xi\right) \cdot \mathbf{C} \cdot \left(\mathbf{e}_\xi \otimes \mathbf{e}_\xi\right)$$

where:

ξ - tension direction

dimensionless moduli:

$$E_r(\xi) = E(\xi) / E_{\max}$$

Shear moduli

$$\frac{1}{2G(\xi,\eta)} = \left(\mathbf{e}_\xi \otimes \mathbf{e}_\eta\right) \cdot \mathbf{C} \cdot \left(\mathbf{e}_\xi \otimes \mathbf{e}_\eta\right)$$

Poisson's ratios

$$\frac{-\nu(\xi,\eta)}{E(\xi)} = \left(\mathbf{e}_\xi \otimes \mathbf{e}_\xi\right) \cdot \mathbf{C} \cdot \left(\mathbf{e}_\eta \otimes \mathbf{e}_\eta\right)$$

gdzie:

ξ,η - perpendicular directions

Table 2. Geometrical parameters of microstructures

	L [m]	H [m]	h^w [m]	h^p [m]
structure a)*	$3 \cdot 10^{-3}$	$6 \cdot 10^{-3}$	$1.0 \cdot 10^{-3}$	$0 \cdot 10^{-3}$
structure b)	$3 \cdot 10^{-3}$	$10 \cdot 10^{-3}$	$0.5 \cdot 10^{-3}$	$0.2 \cdot 10^{-3}$
structure c)	$9 \cdot 10^{-3}$	$6 \cdot 10^{-3}$	$0.5 \cdot 10^{-3}$	$0.2 \cdot 10^{-3}$
structure d)	$18 \cdot 10^{-3}$	$6 \cdot 10^{-3}$	$0.5 \cdot 10^{-3}$	$0.2 \cdot 10^{-3}$

*a) brak przepony

Skeleton material: aluminium:

$$E_s = 70 \text{ GPa} \quad \nu_s = 0.3$$

Graphical representation of Young's moduli

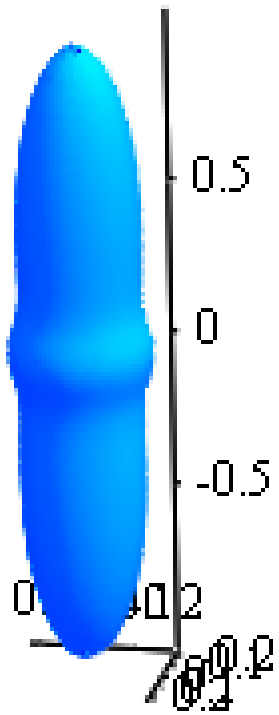

a)

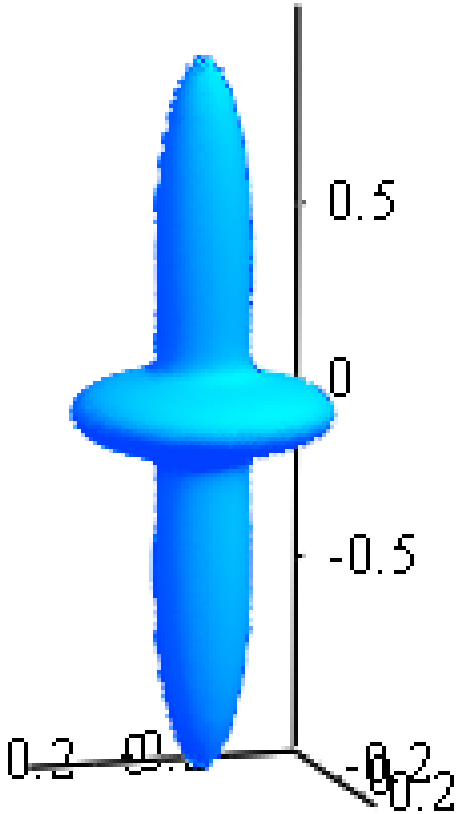

b)

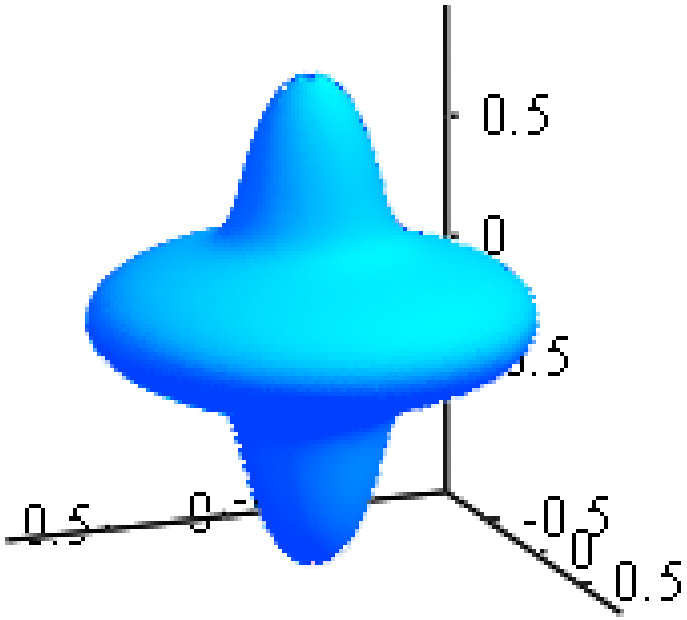

c)

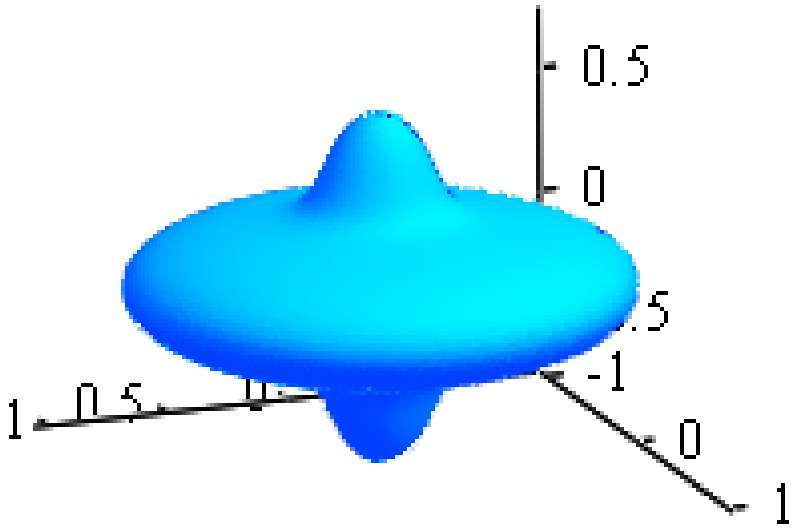

d)

Table 3. Choosen material constants

	E_{max} [MPa]	G_1 [MPa]	G_2 [MPa]	ν_1
structure a)*	$1.895 \cdot 10^4$	$1.359 \cdot 10^3$	$1.776 \cdot 10^3$	0.554
structure b)	$1.039 \cdot 10^4$	$1.348 \cdot 10^3$	$0.579 \cdot 10^3$	0.399
structure c)	$4.063 \cdot 10^3$	$1.598 \cdot 10^3$	$0.635 \cdot 10^3$	0.129
structure d)	$3.105 \cdot 10^3$	$1.446 \cdot 10^3$	$0.444 \cdot 10^3$	0.074

Tension test

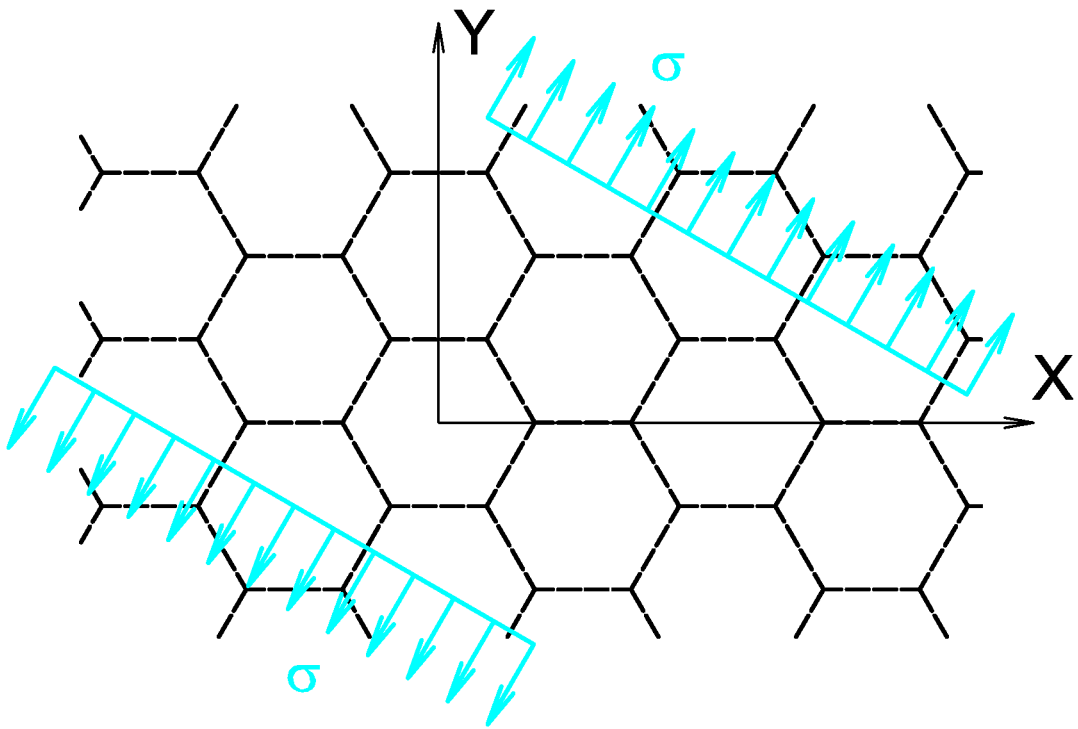

Micro-macro transition - relation between macro critical stress and limit state in skeleton material:

$$\sigma_{CR} = \sigma_{CR}\left(L, H, h_w, h_p, R_e^s, E_s, \nu_s\right)$$

Table 4. Critical stress in a tension test

	Structure a	Structure b	Structure c	Structure d
σ_{CR}	10.12 MPa	9.12 MPa	4.48 MPa	1.17 MPa

Conclusions:

Effective model for cellular materials with closed cells

Advantages:

- macroscopic constitutive model follows readily from the analytical treatment
- elastic stiffness and initial strength are expressed in terms of geometric and material parameters of skeleton structure
- possibility to tailor the material to special mechanical requirements in the elastic range

References

Gibson, L.J & Ashby, M.F. 1997. *Cellular Solids*, 2nd edition Cambridge: University Press

Grediac, M. 1993, A Finite Element Study of the Transverse Shear in Honeycomb Cores, *Int.J.Solids Struct*.,30: 1777-1788

Grenestedt, J.L. 1999. Effective elastic behaviour of some models for 'perfect' cellular solids. *Int.J.Solids Struct*.,36: 1471-1501

Janus-Michalska, M. & Pęcherski, R.B. 2003. Macroscopic properties of open-cell foams based on microstructural modeling. *Technische Mechanik.* Band 23, Heft 2-4: 234-244

Janus-Michalska, M. in press 2005. Effective Models Describing Elastic Behaviour of Cellular Materials, *Archives of Metallurgy and Materials*

Nemat-Naser, S. & Hori, M. 1999. *Micromechanics.* 2nd edition Elsevier

Wang, C.M. & Reddy, J.N. & Lee K.H. 2000. *Shear Deformable Beams and Plates, Relationships with Classical Solutions.* 1st edition. Elsevier: Netherlands